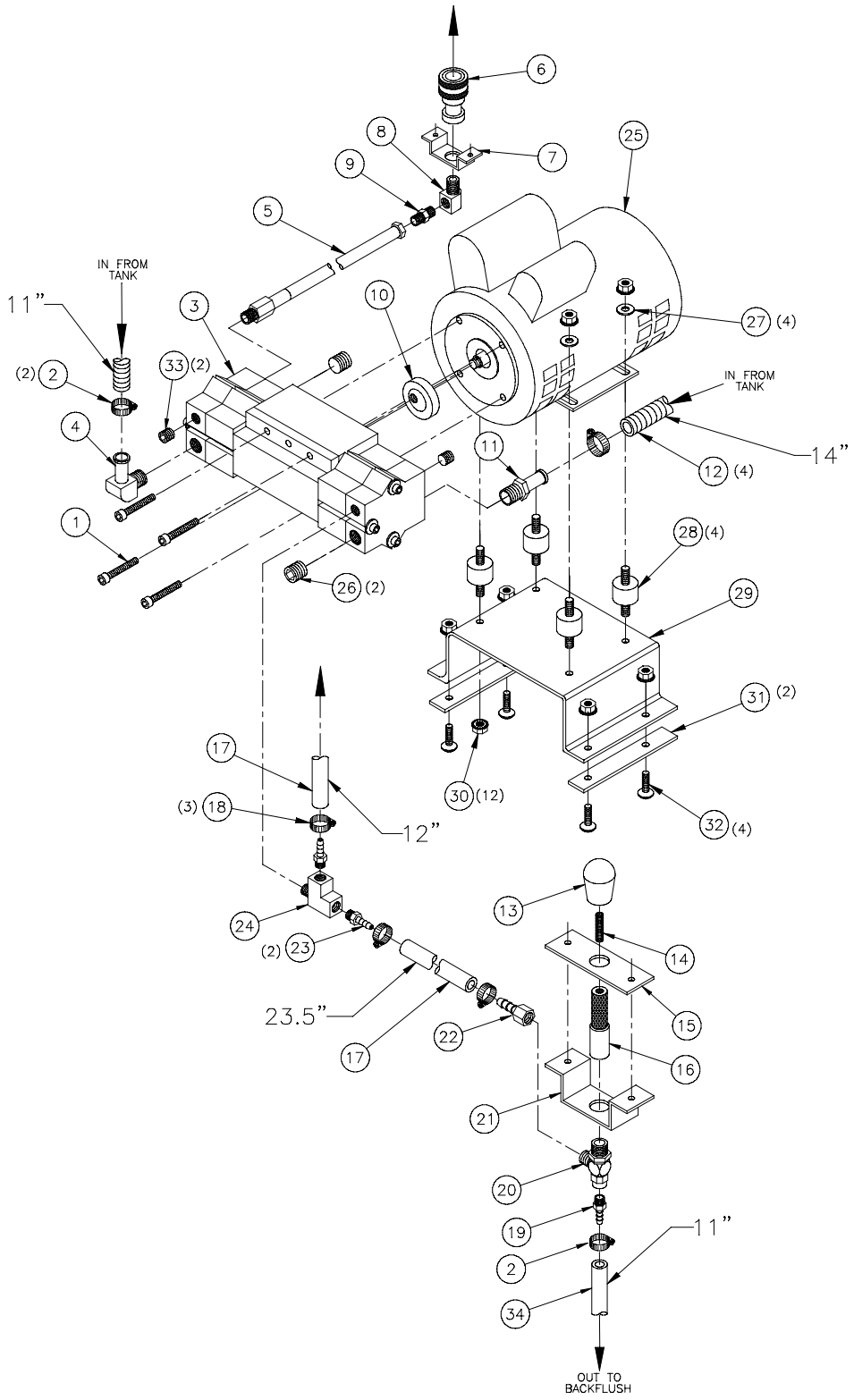Pump/Motor Assembly: BS100TE